TRANSMISSION & TRANSFORMATION SYSTEMS

TRANSMISSION VS TRANSFORMATION

- **Transmission systems:**
  - **Multiple components** that have the **same type** of movement (rotational, linear, etc)

- **Transformation systems:**
  - **Different components** in the system have **different** types of movement
    - Ex: rotational movement leads to linear movement

Components can be connected **directly**

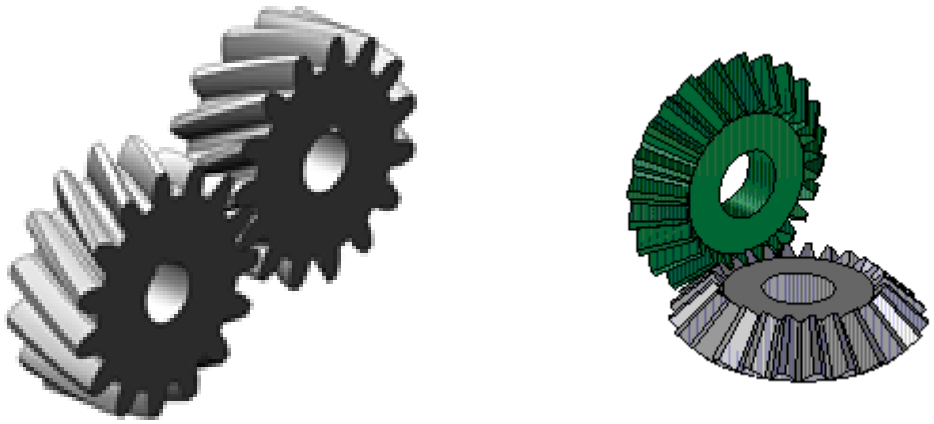

or through **an intermediate component**.

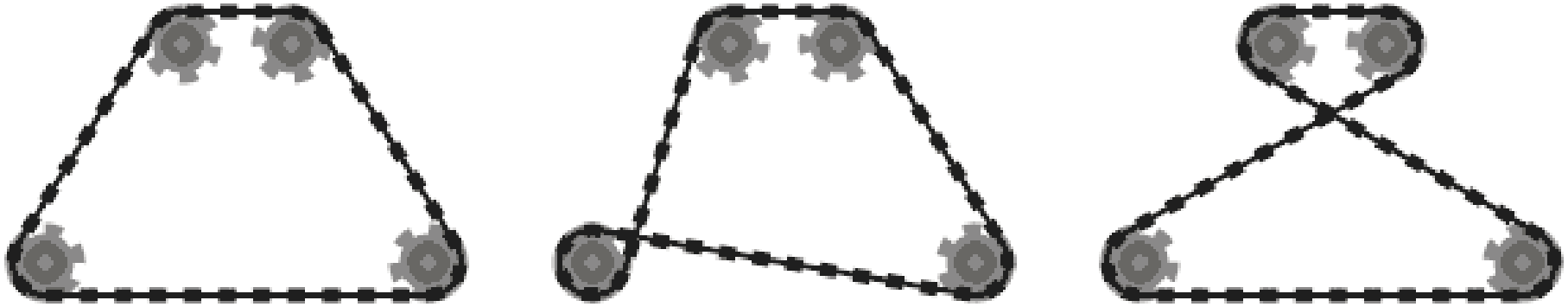

TRANSMISSION SYSTEMS

Reversibility:

- A system is considered reversible if **either part can be the driver or driven**
  - **Driver:** **initiates** the motion
  - **Driven:** **receives** the motion
    - Remember: there can be **intermediate** components too

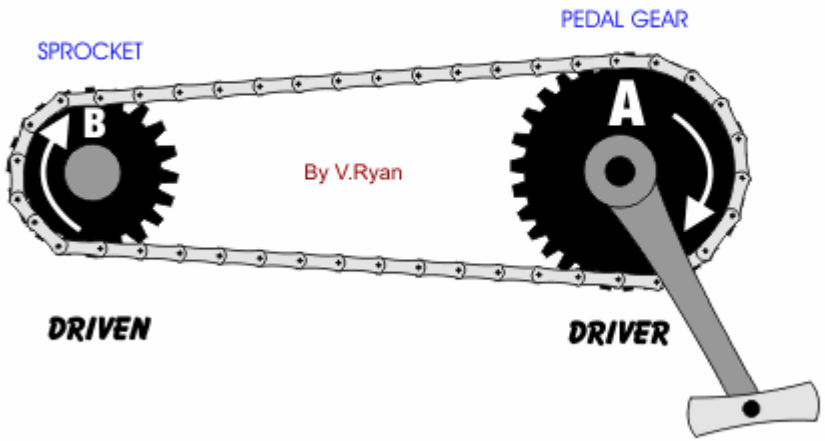

TRANSMISSION SYSTEMS

1) Gear Trains

- At least **2 gears** whose teeth **interlock**

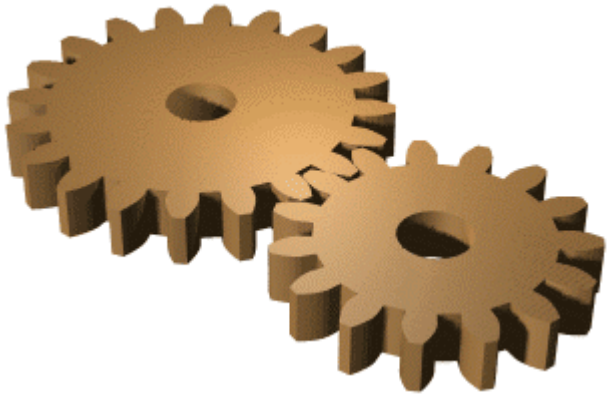

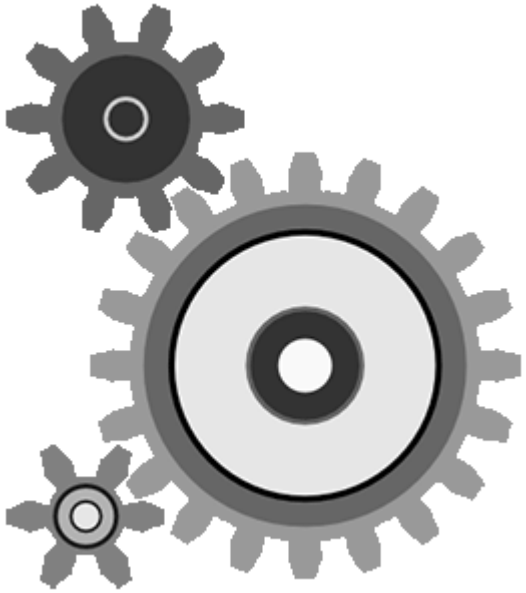

TRANSMISSION SYSTEMS

1) Gear Trains

- Notice that the gears move in **alternate** directions

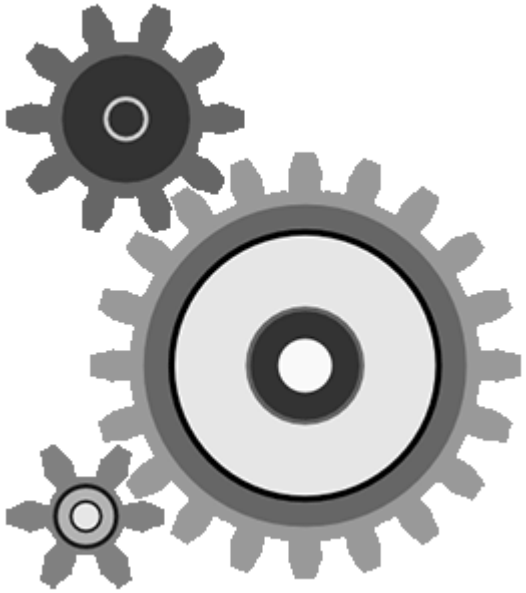

TRANSMISSION SYSTEMS

1) Gear Trains

- Are they reversible?
  - **YES!**
    - You can move either gear and it will cause the others to move as well

TRANSMISSION SYSTEMS

1) Gear Trains

- Speed of the gears depends on:
  - The **number of teeth**

  OR
  - The **diameter** of the gears (friction wheels)

TRANSMISSION SYSTEMS

1) Gear Trains

We'll come back to this again later!

$$speed\ ratio = \frac{\#\ teeth\ driver}{\#\ teeth\ driven}$$

$$speed\ ratio = \frac{diameter\ driver}{diameter\ driven}$$

EXAMPLE

- If a driver gear has a diameter of 20cm and the driven gear has a diameter of 40 cm, what is the speed ratio?

$$speed\ ratio = \frac{diameter\ driver}{diameter\ driven}$$

$$speed\ ratio = \frac{20cm}{40cm} = \frac{1}{2} = 0.5$$

- Which one is moving faster?

Driver; speed ratio is <1, means a decrease in speed from driver to driven

TRANSMISSION SYSTEMS

2) Chain and Sprocket

- At least **2 gears** connected by a **chain**

Notice: all the gears turn in the **same** direction

If it had gears on the **outside**; they would turn in the **opposite** direction

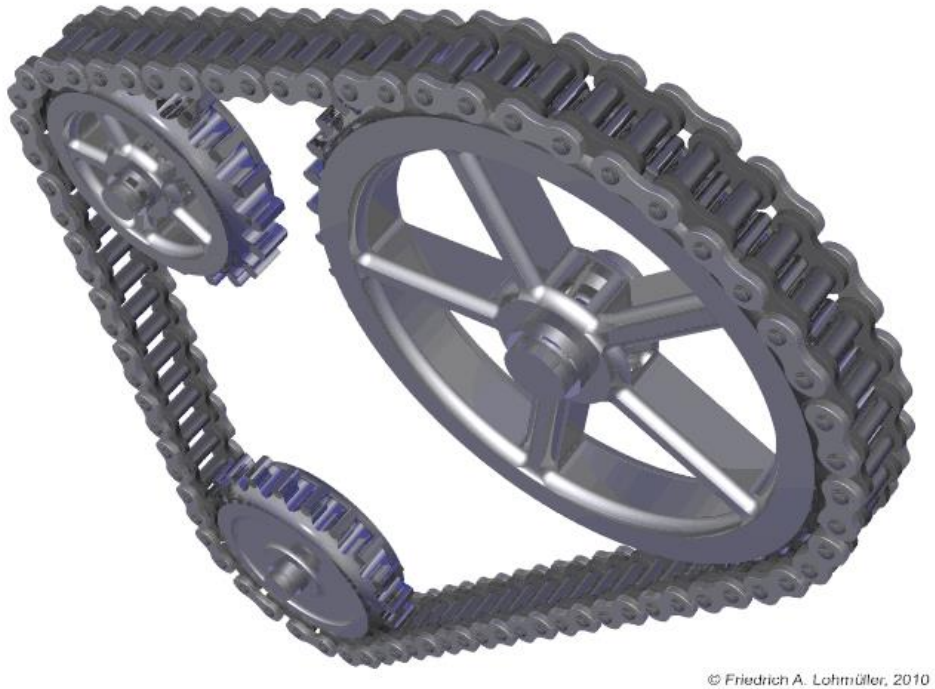

TRANSMISSION SYSTEMS

2) Chain and Sprocket

- Are they reversible?
  - **Generally yes!**

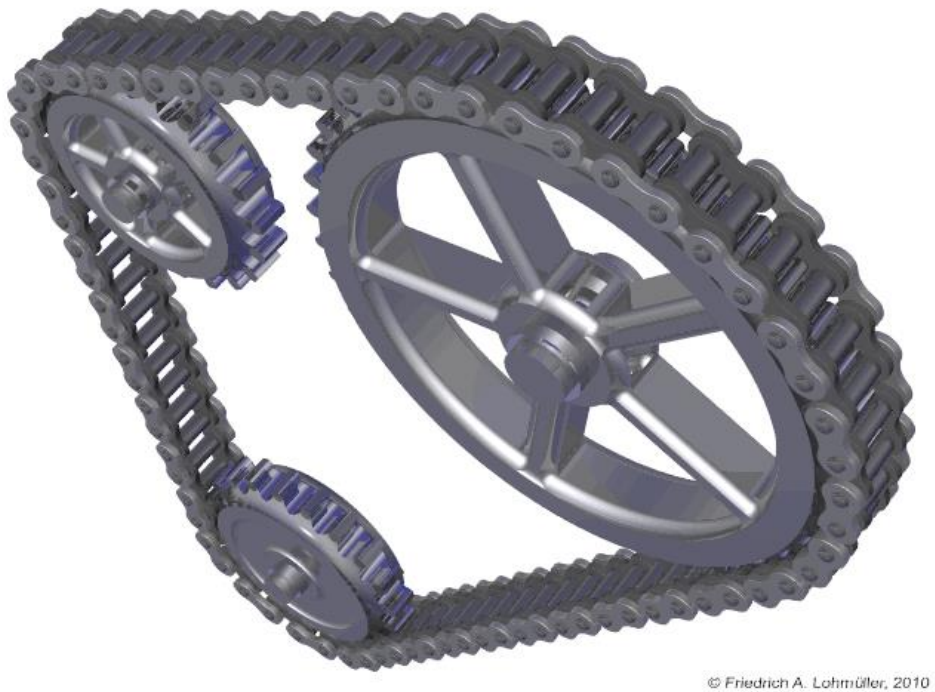

TRANSMISSION SYSTEMS

3) Worm and worm gear

- Consists of a **screw** and at least one **gear**
- Are they reversible?
  - **No**

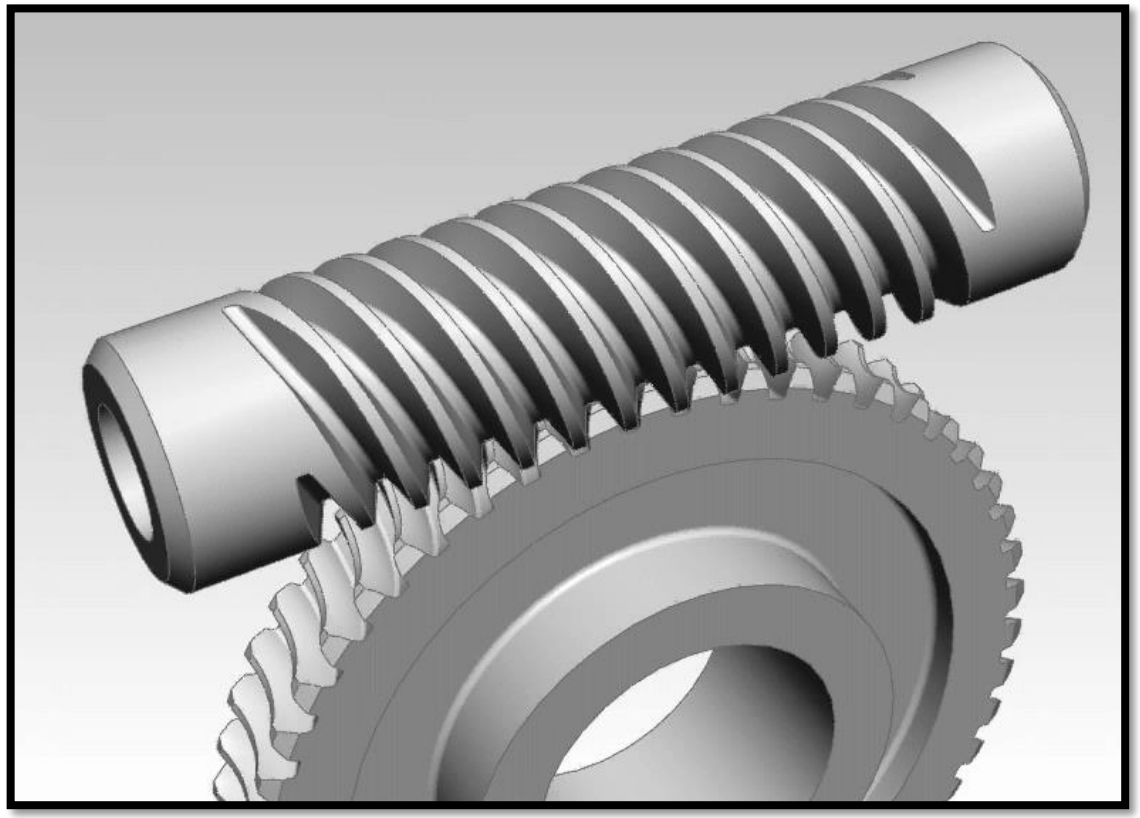

TRANSMISSION SYSTEMS

4) Friction wheels (or friction gears)

- Like gears but **without teeth**
- Touch **directly**; **friction** causes the movement

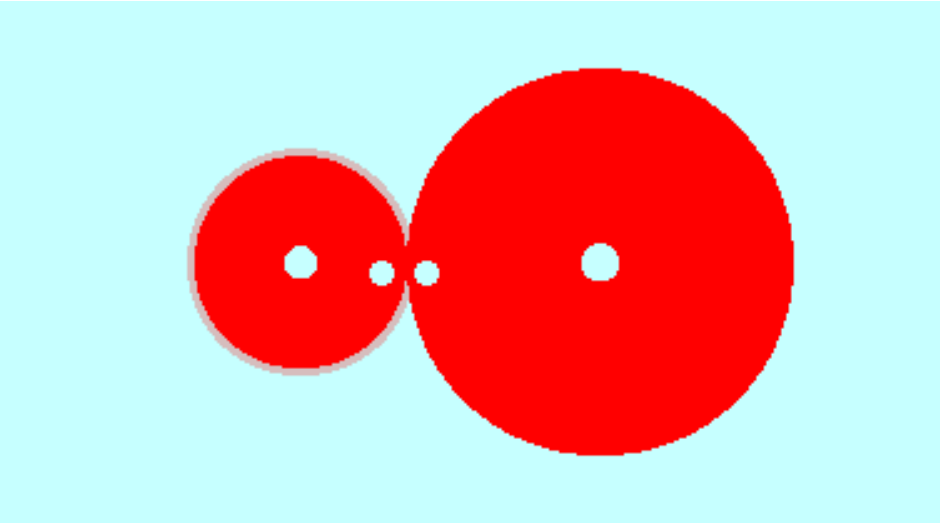

TRANSMISSION SYSTEMS

4) Friction wheels (or friction gears)

- Are they reversible?
  - **Yes!**

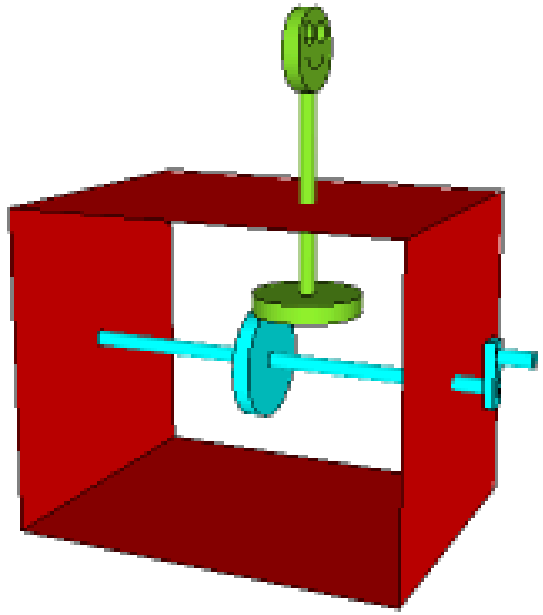

TRANSMISSION SYSTEMS

5) Belt and pulley system

- Like chain and sprocket but **without teeth**

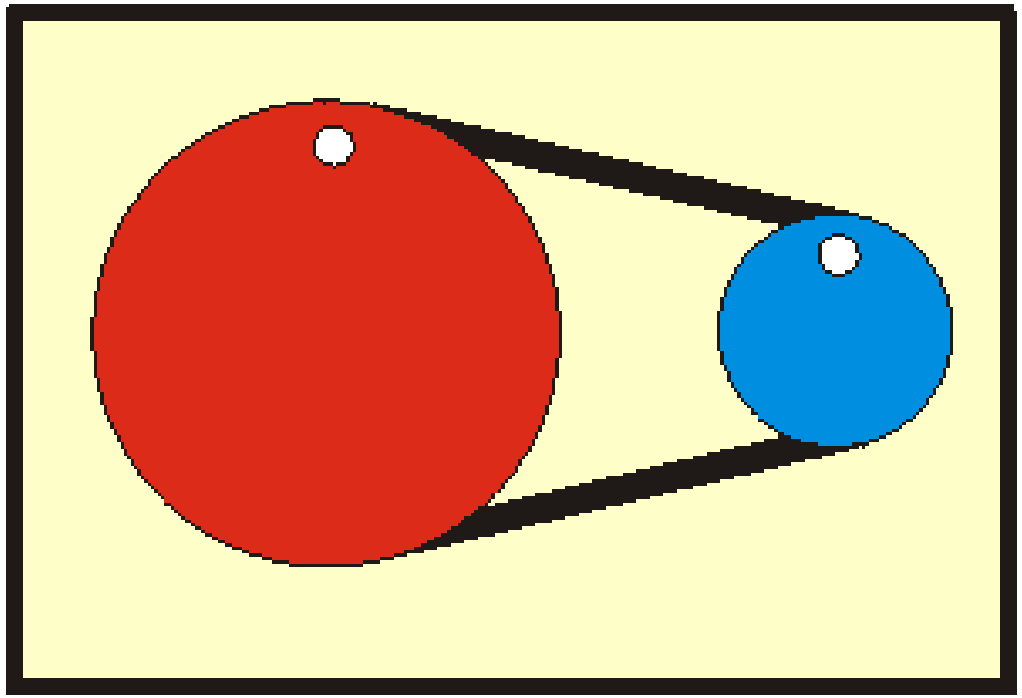

Are they reversible?

Yes!

TRANSFORMATION SYSTEMS

TRANSFORMATION SYSTEMS

- Also have **driver** components and **driven** components
  - **NO intermediates**
- **Remember:**
  - **Transmission: same type** of movement throughout
  - **Transformation: changing** the type of movement
    - Ex: rotational to translational

TRANSFORMATION SYSTEMS

- 1) **Rack and Pinion**
  - Composed of a gear (**pinion**) and a grooved/toothed bar (**rack**)

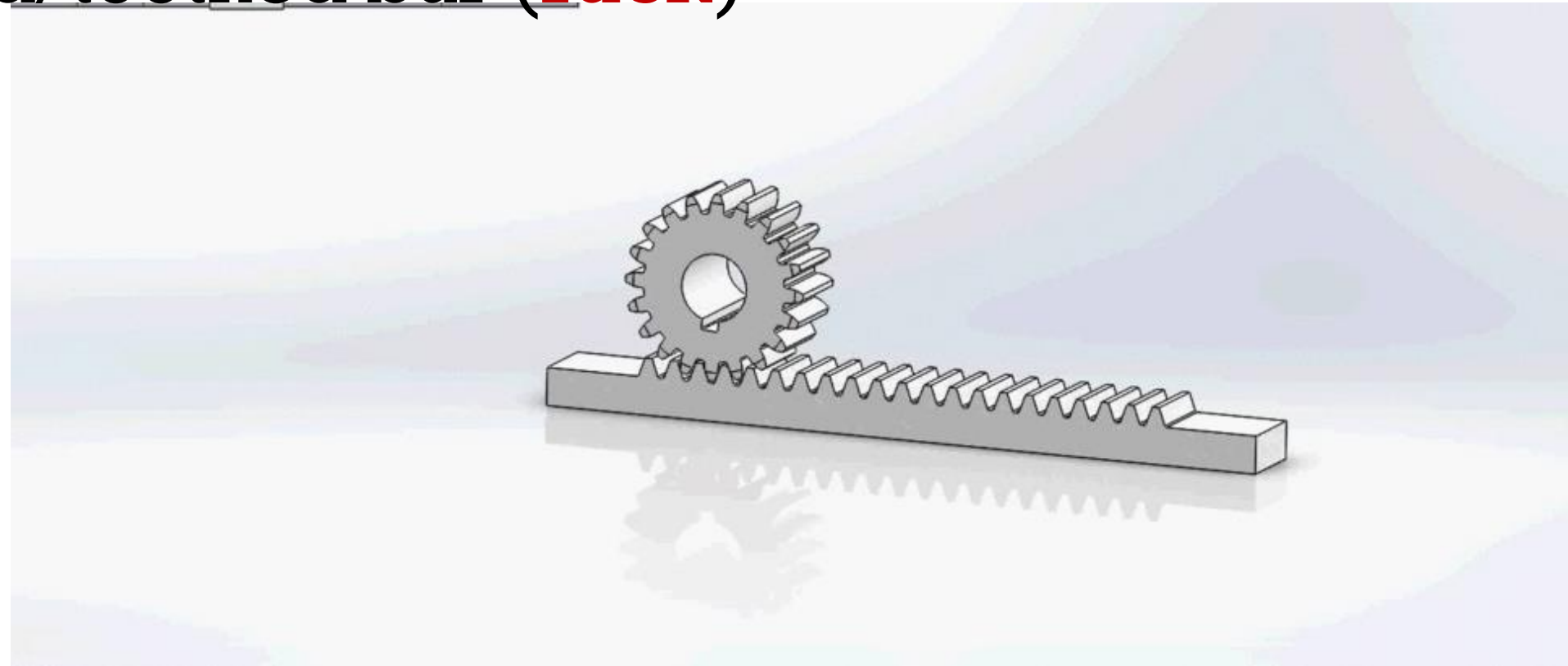

TRANSFORMATION SYSTEMS

- 1) **Rack and Pinion**
- Are they reversible?
  - **Yes!**

TRANSFORMATION SYSTEMS

- 2) **Screw gear system**
  - Composed of a **screw** and a **nut**

Type 1
Screw is the driver

TRANSFORMATION SYSTEMS

- 2) **Screw gear system**
  - Are they reversible?
    - **No**

Type 2
Nut is the driver

There is a helical guide
The thread transforms a **rotational** motion into a **translational motion**

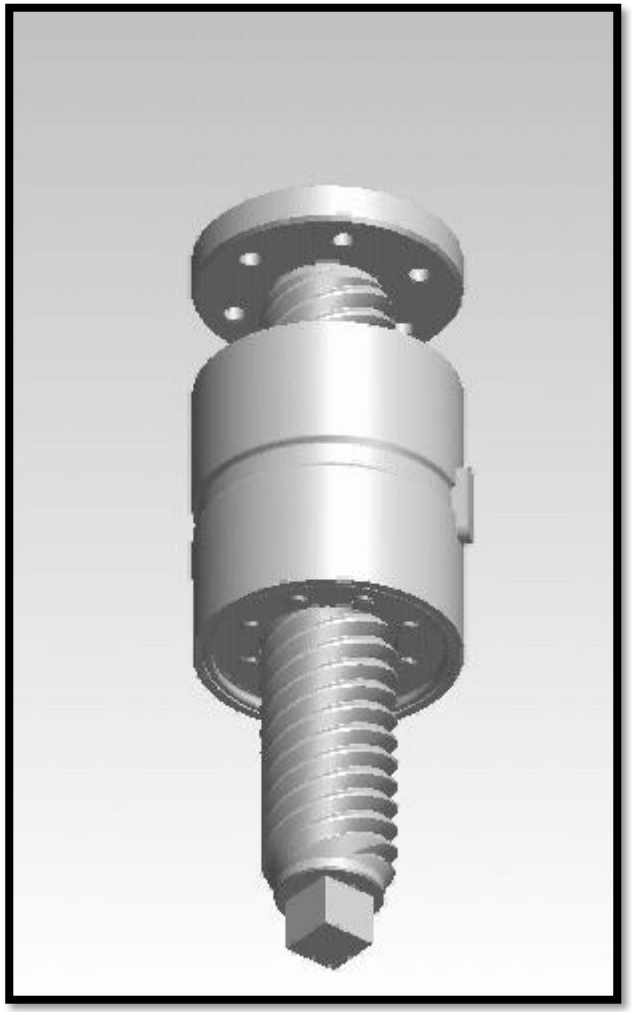

TRANSFORMATION SYSTEMS

- 3) **Cam and follower**
  - Composed of a wheel that is often oddly shaped(**cam**) and stick that raises and lowers (**follower**)

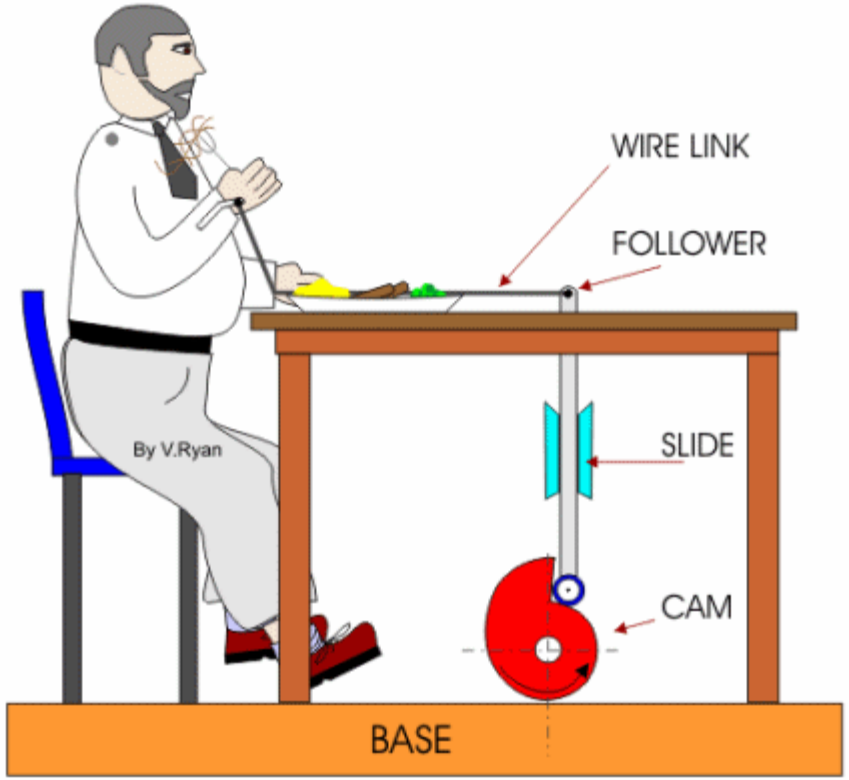

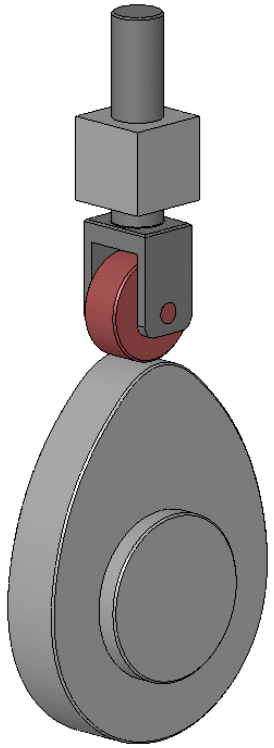

TRANSFORMATION SYSTEMS

- 3) **Cam and follower**
- Are they reversible?
  - **No**

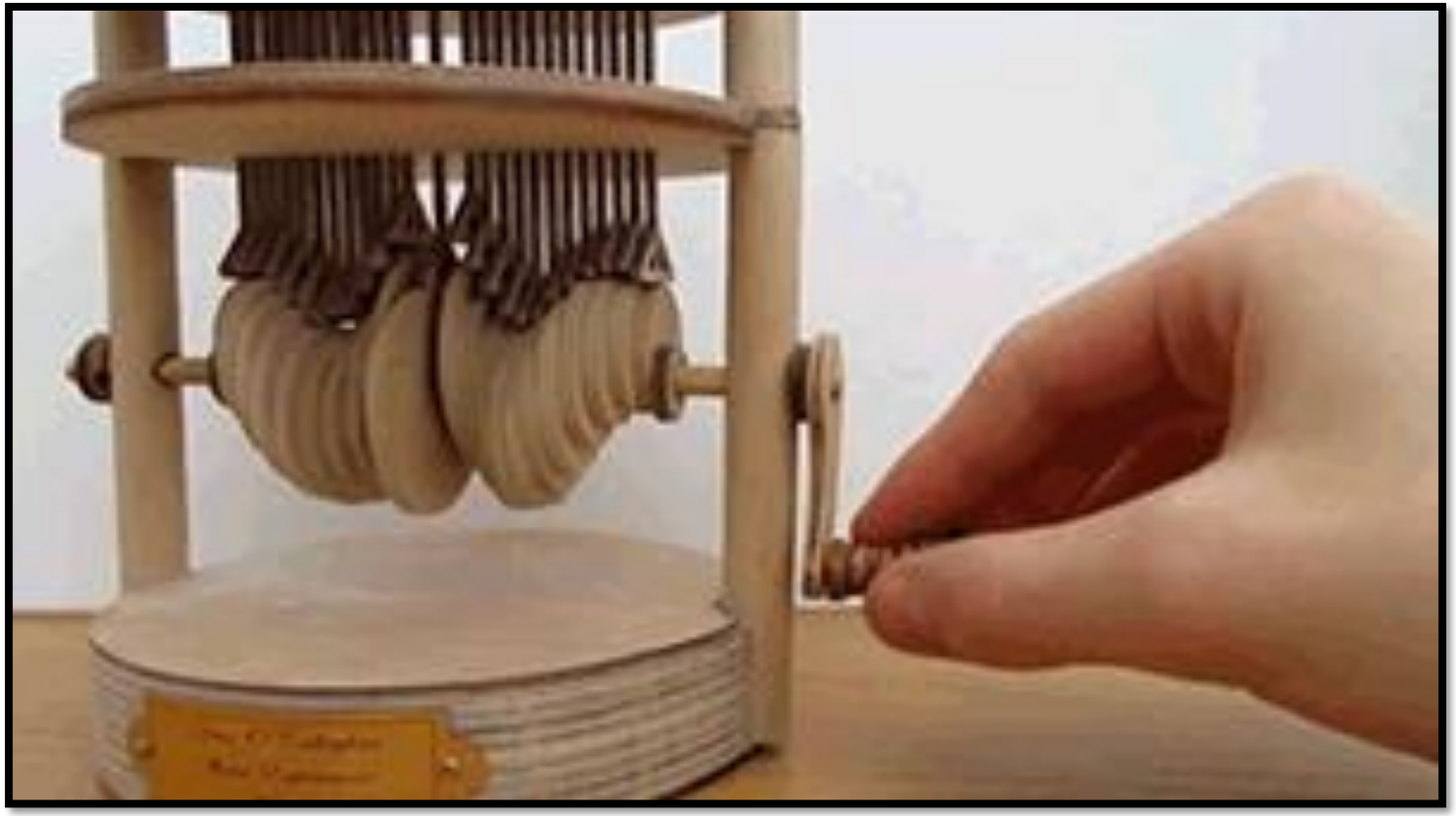

TRANSFORMATION SYSTEMS

- **4) Slider and crank (piston)**
  - Similar to cam and follower but the crank is usually **circular** and the slider is usually a **block that moves within a tube**

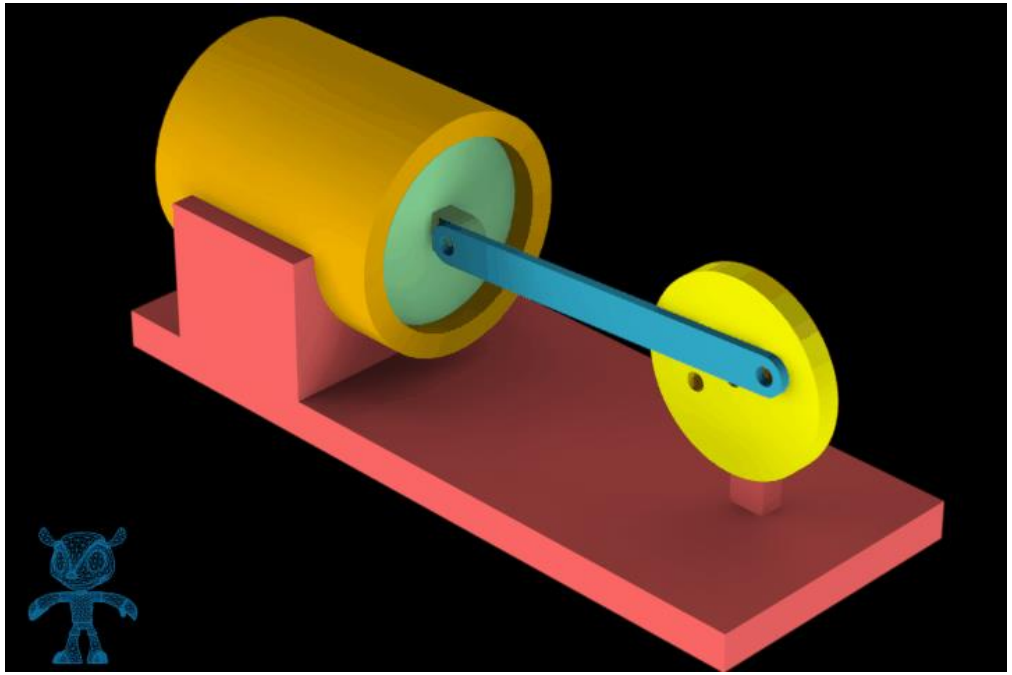

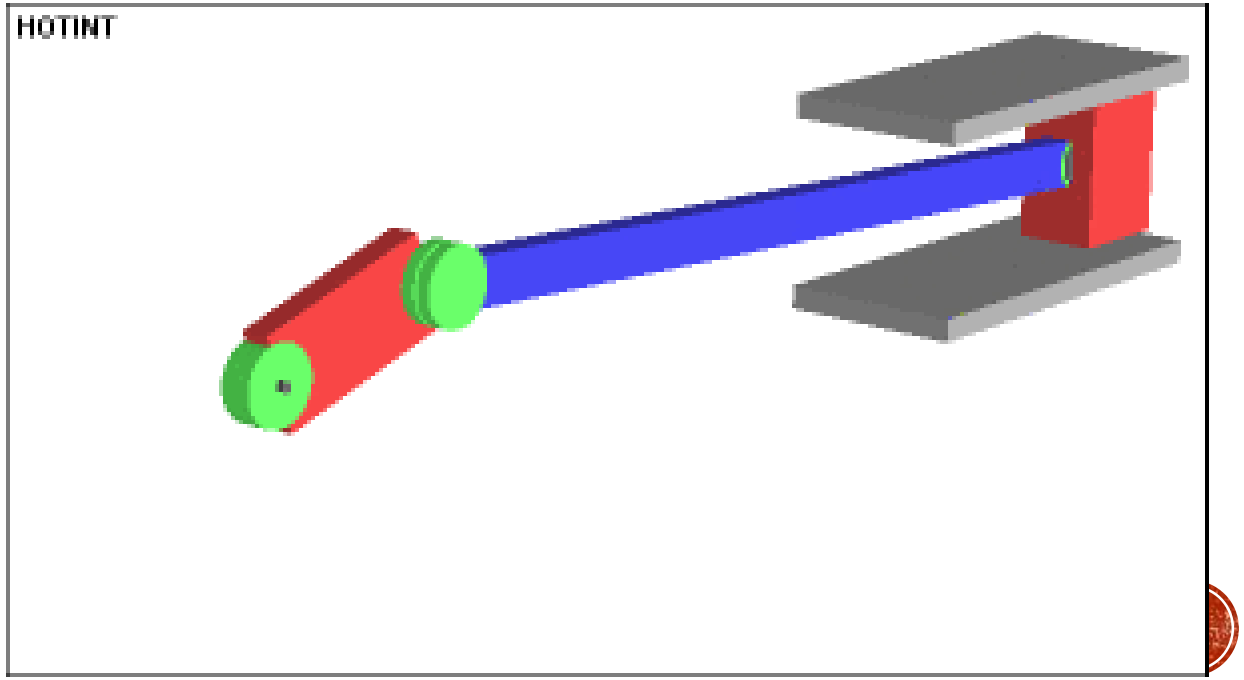

TRANSFORMATION SYSTEMS

- **4) Slider and crank (piston)**
  - Are they reversible?
    - **Yes (but sometimes not well)**

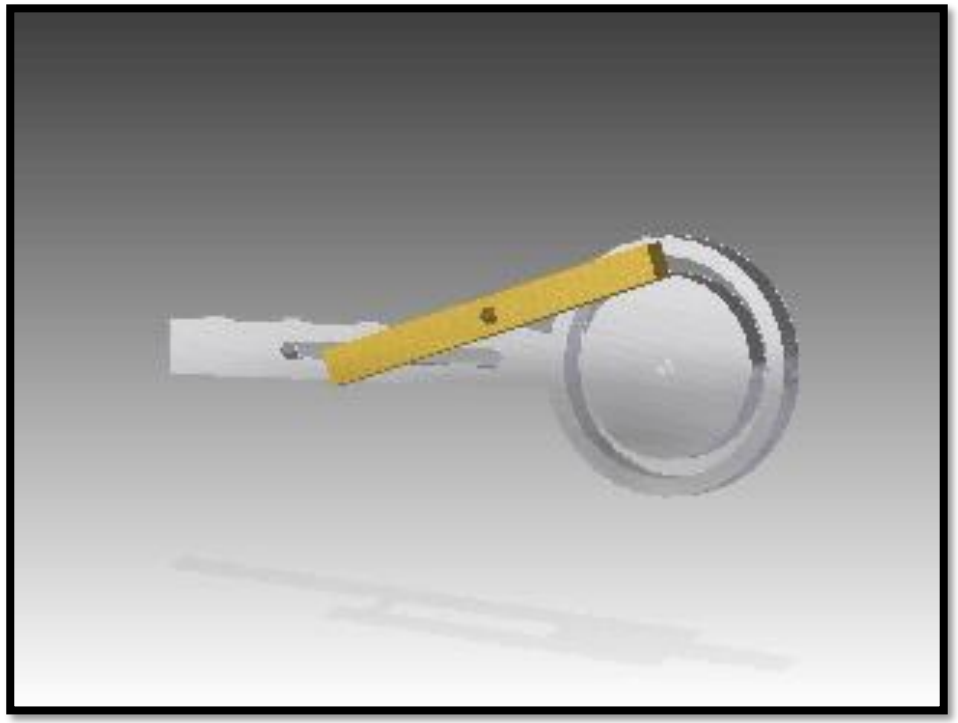

Slider and crank

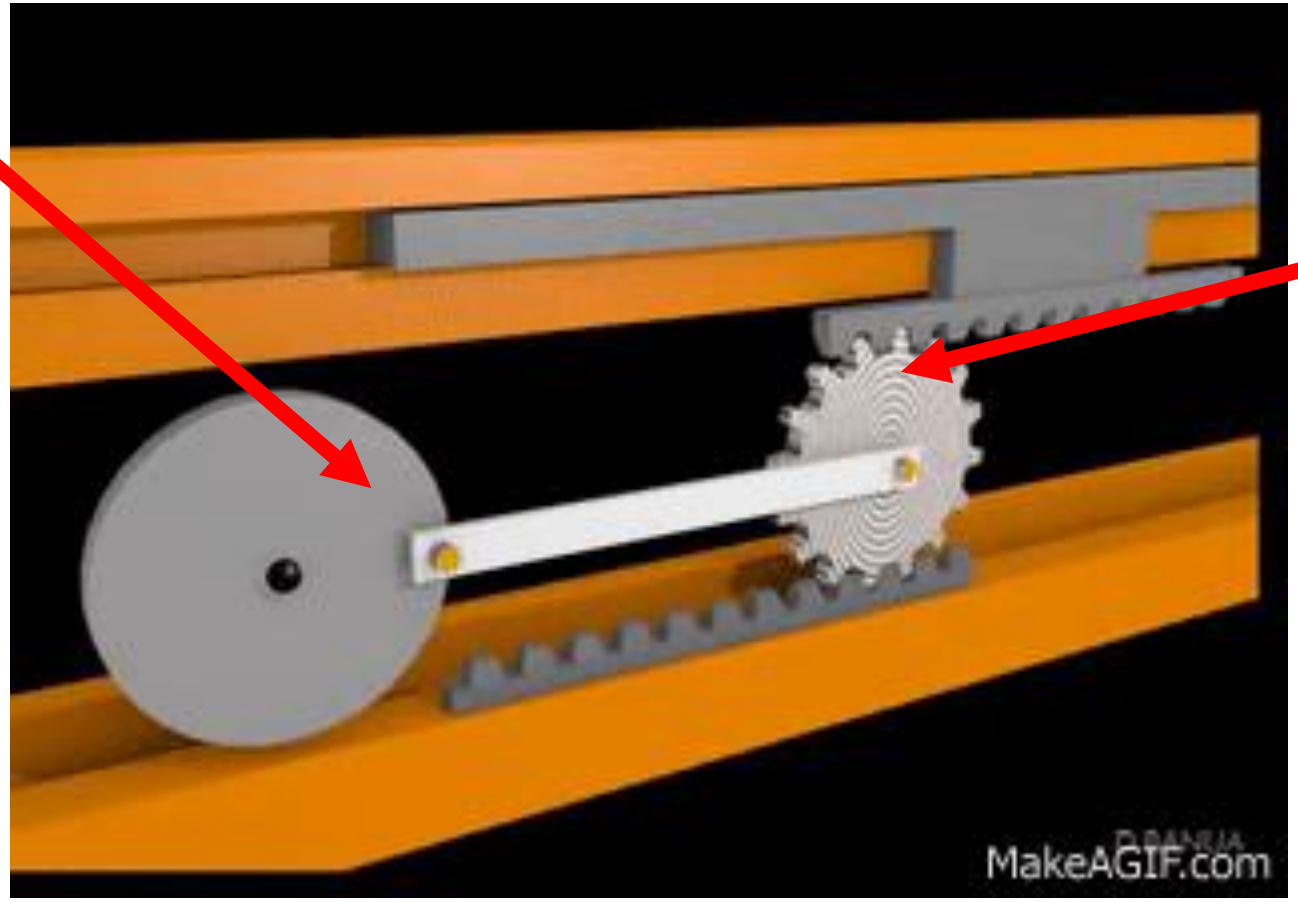

Rack and pinion

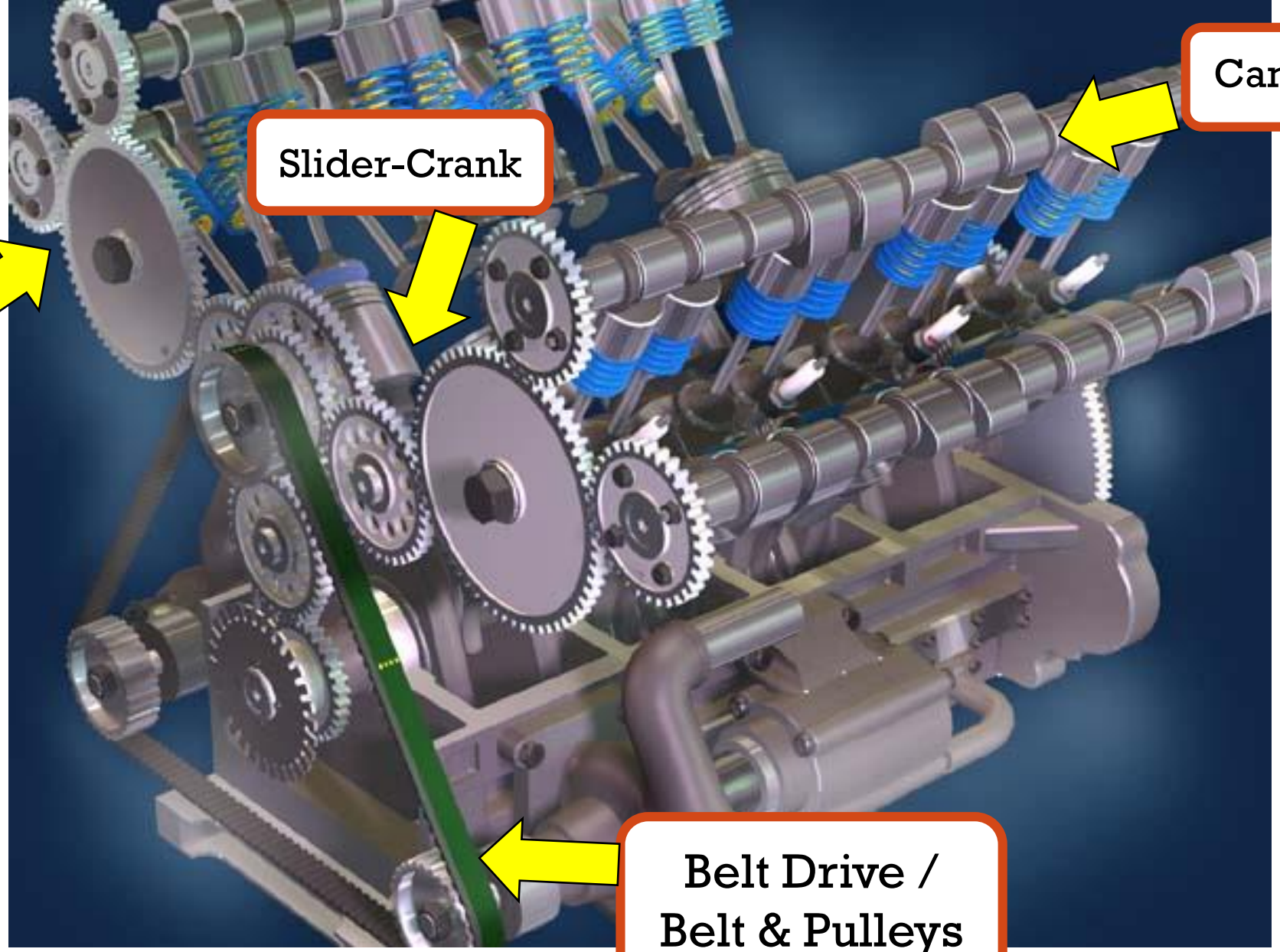
Cam & Follower
Slider-Crank
Gear Train
Belt Drive /
Belt & Pulleys

Motion Transmission

Speed Ratios

Speed Ratio: (Components with teeth)

$$\text{Speed Ratio} = \frac{\#\ \text{Driver teeth}}{\#\ \text{Driven teeth}} = \frac{28}{7} = 4$$

(The small sprocket will rotate 4 times faster than the large *(driver)* sprocket)

Driver component

28 teeth

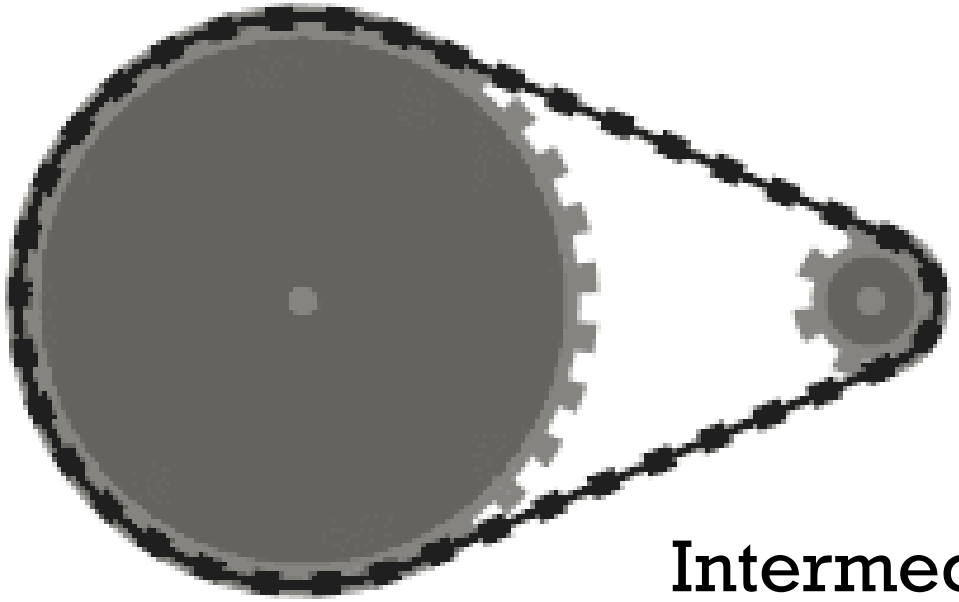

Driven component

7 teeth

Intermediate component

(the chain)

Speed Ratio: (Components with teeth)

If the driver sprocket rotates 8 times clockwise, then the driven sprocket will rotate 32 times clockwise

Speed Ratio = 4

Driver component
28 teeth

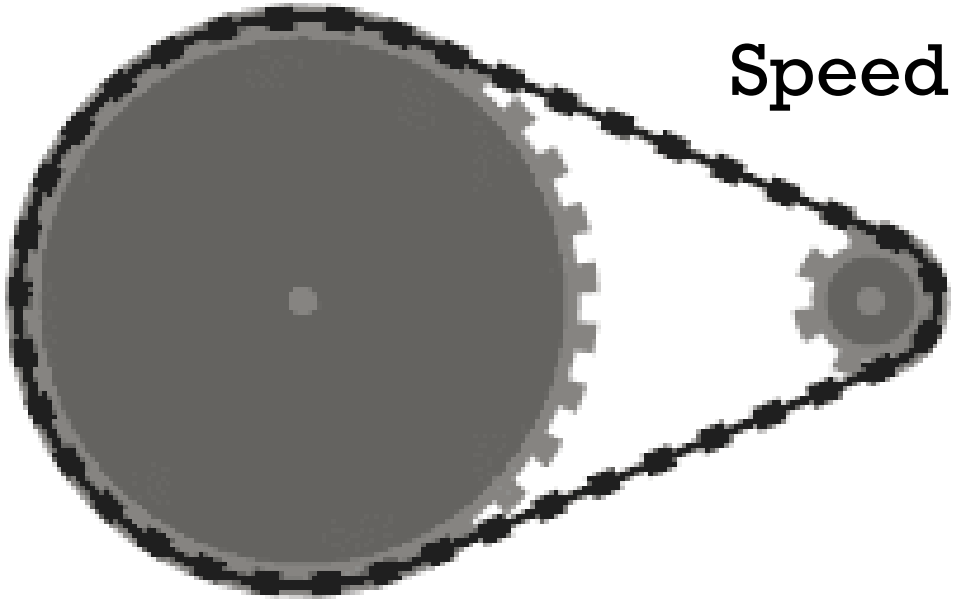

Driven component
7 teeth

Speed Ratio: (Components without teeth)

$$\text{Speed Ratio} = \frac{\text{Driver diameter}}{\text{Driven diameter}}$$

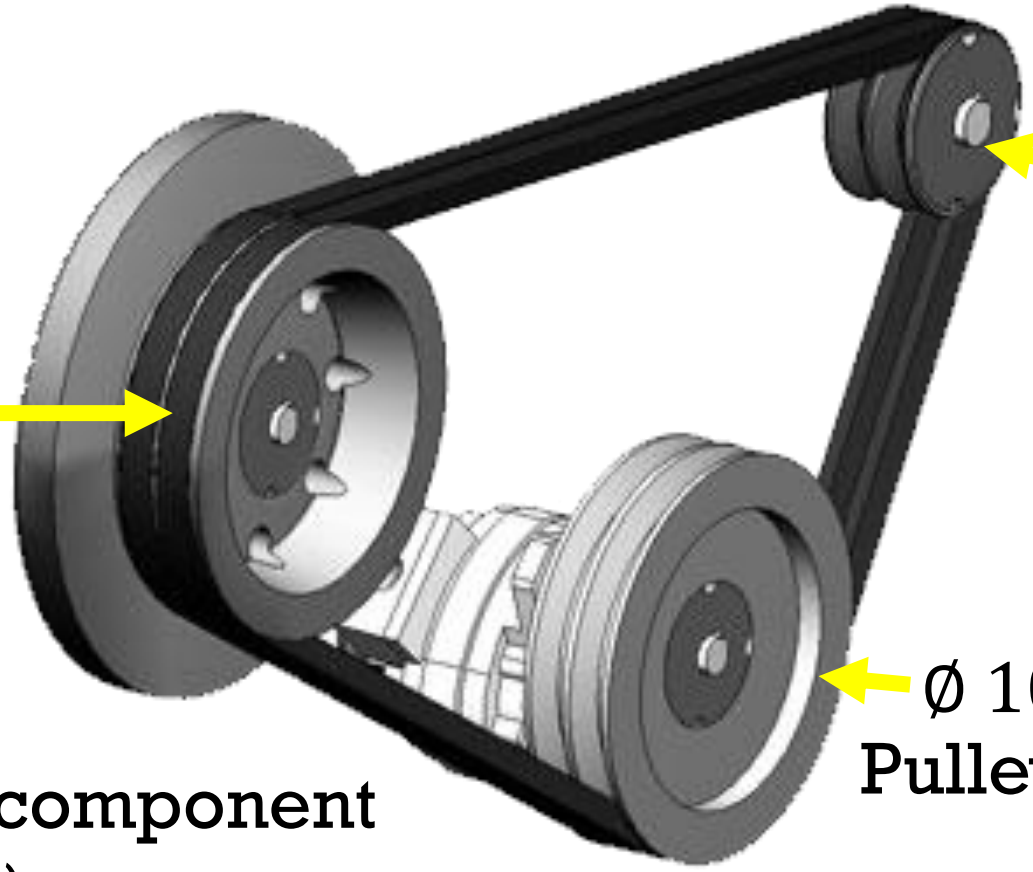

Speed Ratio (A→B) = $\frac{\text{Ø Pulley A}}{\text{Ø Pulley B}} = \frac{8''}{4''} = 2$

(Pulley B will rotate 2 times the speed of pulley A)

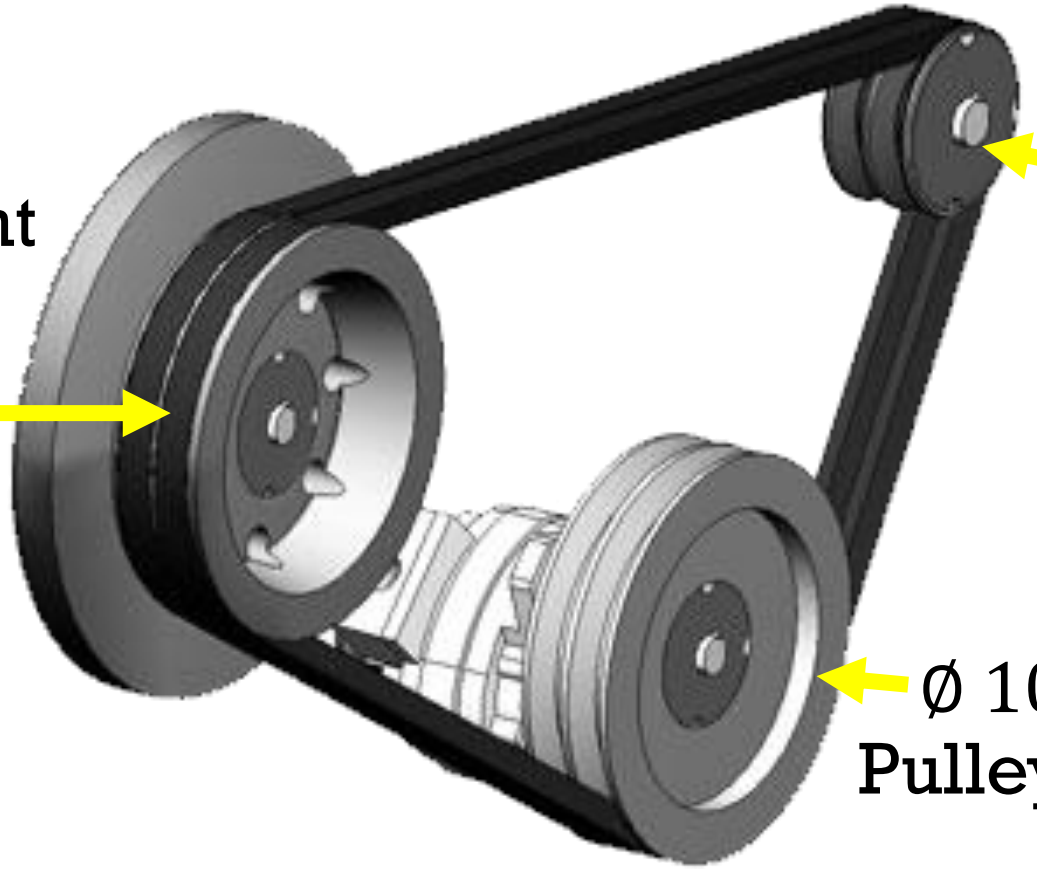

Speed Ratio (A→C) = $\frac{\text{Ø Pulley A}}{\text{Ø Pulley C}} = \frac{8''}{10'} = \frac{4}{5}$ *or* 0.8

(Pulley C will rotate 0.8 times the speed of pulley A)

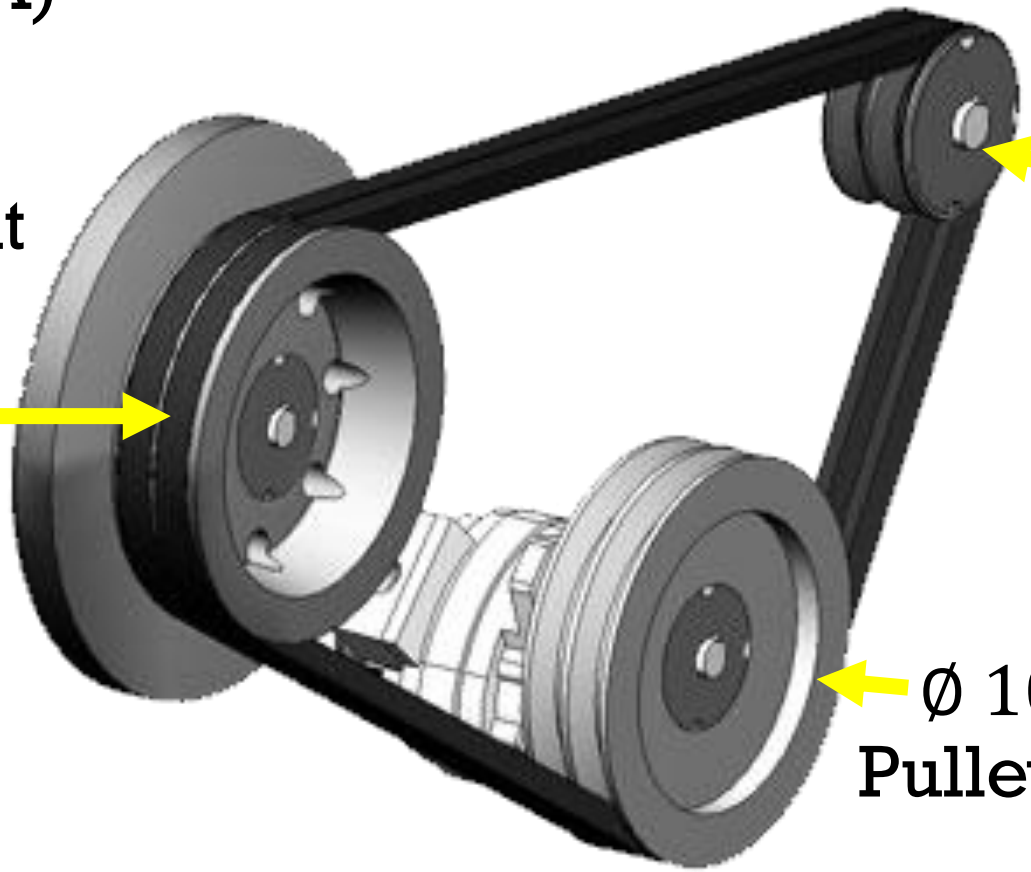

If pulley A rotates 40 revolutions per minute (40 rpm)…

… pulley B will rotate at a speed of 80 rpm

… pulley C will rotate at a speed of 32 rpm

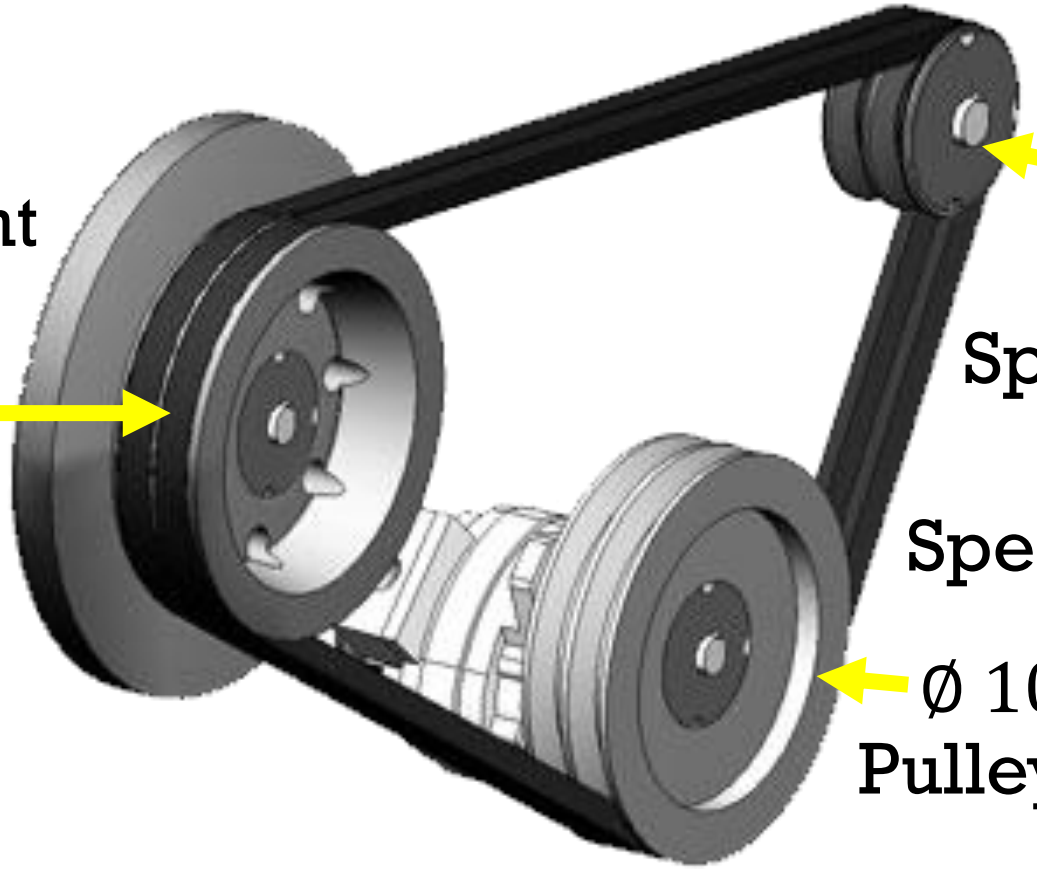

Speed Ratio (A→B) = 2

Speed Ratio (A→C) = 0.8